NTN BEARING CORPORATION OF AMERICA
Head Office
1600 E. Bishop Court, P.O. Box 7604
Mount Prospect, IL 60056-7604, U.S.A.
Phone: 847-298-7500
Fax: 847-699-9744
Toll Free: 800-323-2358
Email: mkt@ntnamerica.com
Website: www.ntnamericas.com

Item # UELFL215-300D1, Two Bolt Rhombus Flanged Unit, Cast Housing, Eccentric Locking Collar, UELFL Type

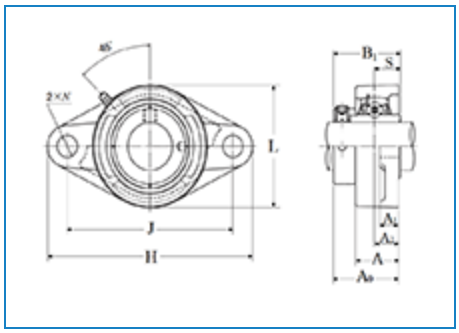

Order Now | Technical Specifications | Dimensional Specifications

Order Now

Ordering Options	FIND A DISTRIBUTOR CONTACT NTN CUSTOMER SUPPORT SPECIALIST ORDER THROUGH NTN DOL (AUTHORIZED DISTRIBUTORS ONLY)

Technical Specifications

Type	2-Bolt Rhombus Flanged Unit
Bearing Type	Ball Bearing

Locking Device	Eccentric Locking Collar
Seal Type	Contact
Seal Material	Nitrile Rubber
Bearing Number	UEL215-300D1
Housing Number	FL215D1
Housing Material	Cast Iron
Housing Construction	1 Piece
End Type	Open
Performance	Light Duty
Dynamic Load Rating	14800 lbf 66000 N 66.00 kN
Static Load Rating	11100 lbf 49500 N 49.50 kN
Rotational Speed [Max]	2100.0 RPM
Weight	14.000 lb 6.350 kg
Operating Temperature Range	-40 to 250 °F -40 to 120 °C
Lubrication	Relubricatable

Dimensional Specifications

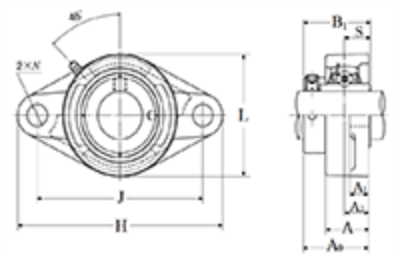

Two Bolt Rhombus Flanged Unit, Cast Housing, Eccentric Locking Collar, UELFL Type - Dimensions

d	3.0000 in 76.200 mm
H	10.8125 in 275.0 mm
L	6.5000 in 165.0 mm
J	8.8594 in 225.0 mm
A	2.2187 in 56.0 mm
A1	0.8750 in 22.0 mm
A2	1.3437 in 34.0 mm
N	0.9062 in 23.0 mm
B1	3.6220 in 92.000 mm
S	1.4685 in 37.300 mm
F	0.3543 in 9.000 mm