NTN BEARING CORPORATION OF AMERICA
Head Office
1600 E. Bishop Court, P.O. Box 7604
Mount Prospect, IL 60056-7604, U.S.A.
Phone: 847-298-7500
Fax: 847-699-9744
Toll Free: 800-323-2358
Email: mkt@ntnamerica.com
Website: www.ntnamericas.com

Item # UELFL213-208D1, Two Bolt Rhombus Flanged Unit, Cast Housing, Eccentric Locking Collar, UELFL Type

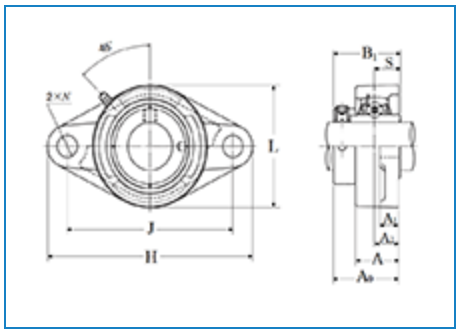

Order Now | Technical Specifications | Dimensional Specifications

Order Now

Ordering Options	FIND A DISTRIBUTOR CONTACT NTN CUSTOMER SUPPORT SPECIALIST ORDER THROUGH NTN DOL (AUTHORIZED DISTRIBUTORS ONLY)

Technical Specifications

Type	2-Bolt Rhombus Flanged Unit
Bearing Type	Ball Bearing

Locking Device	Eccentric Locking Collar
Seal Type	Contact
Seal Material	Nitrile Rubber
Bearing Number	UEL213-208D1
Housing Number	FL213D1
Housing Material	Cast Iron
Housing Construction	1 Piece
End Type	Open
Performance	Light Duty
Dynamic Load Rating	12900 lbf 57500 N 57.50 kN
Static Load Rating	9000 lbf 40000 N 40.00 kN
Rotational Speed [Max]	2400.0 RPM
Weight	12.000 lb 5.440 kg
Operating Temperature Range	-40 to 250 °F -40 to 120 °C
Lubrication	Relubricatable

Dimensional Specifications

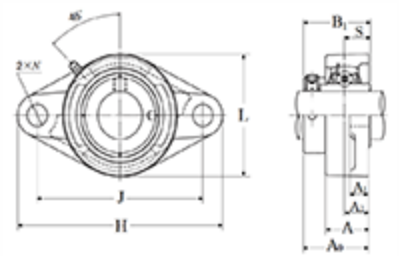

Two Bolt Rhombus Flanged Unit, Cast Housing, Eccentric Locking Collar, UELFL Type - Dimensions

d	2.5000 in 63.500 mm
H	10.1562 in 258.0 mm
L	6.0937 in 155.0 mm
J	8.2650 in 210.0 mm
A	1.9687 in 50.0 mm
A1	0.8750 in 22.0 mm
A2	1.1875 in 30.0 mm
N	0.9062 in 23.0 mm
B1	3.3740 in 85.700 mm
S	1.3425 in 34.100 mm
F	0.3425 in 8.700 mm