NTN BEARING CORPORATION OF AMERICA
Head Office
1600 E. Bishop Court, P.O. Box 7604
Mount Prospect, IL 60056-7604, U.S.A.
Phone: 847-298-7500
Fax: 847-699-9744
Toll Free: 800-323-2358
Email: mkt@ntnamerica.com
Website: www.ntnamericas.com

Item # UELFL211-201D1, Two Bolt Rhombus Flanged Unit, Cast Housing, Eccentric Locking Collar, UELFL Type

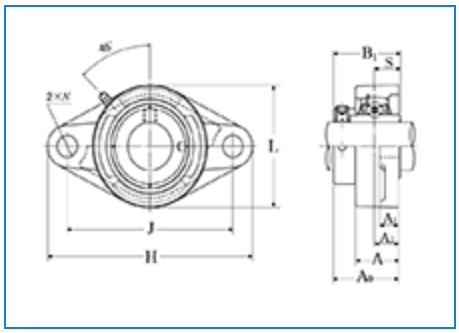

Order Now | Technical Specifications | Dimensional Specifications

Order Now

Ordering Options	FIND A DISTRIBUTOR CONTACT NTN CUSTOMER SUPPORT SPECIALIST ORDER THROUGH NTN DOL (AUTHORIZED DISTRIBUTORS ONLY)

Technical Specifications

Type	2-Bolt Rhombus Flanged Unit
Bearing Type	Ball Bearing

Locking Device	Eccentric Locking Collar
Seal Type	Contact
Seal Material	Nitrile Rubber
Bearing Number	UEL211-201D1
Housing Number	FL211D1
Housing Material	Cast Iron
Housing Construction	1 Piece
End Type	Open
Performance	Light Duty
Dynamic Load Rating	9800 lbf 43500 N 43.50 kN
Static Load Rating	6550 lbf 29200 N 29.20 kN
Rotational Speed [Max]	2900.0 RPM
Weight	7.300 lb 3.310 kg
Operating Temperature Range	-40 to 250 °F -40 to 120 °C
Lubrication	Relubricatable

Dimensional Specifications

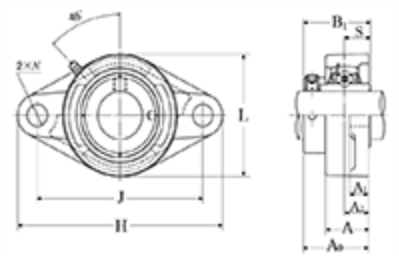

Two Bolt Rhombus Flanged Unit, Cast Housing, Eccentric Locking Collar, UELFL Type - Dimensions

d	2.0625 in 52.388 mm
H	8.8125 in 224.0 mm
L	5.1250 in 130.0 mm
J	7.2500 in 184.0 mm
A	1.6875 in 43.0 mm
A1	0.7187 in 18.0 mm
A2	0.9844 in 25.0 mm
N	0.7500 in 19.0 mm
B1	2.8110 in 71.400 mm
S	1.0945 in 27.800 mm
F	0.2362 in 6.000 mm