NTN BEARING CORPORATION OF AMERICA
Head Office
1600 E. Bishop Court, P.O. Box 7604
Mount Prospect, IL 60056-7604, U.S.A.
Phone: 847-298-7500
Fax: 847-699-9744
Toll Free: 800-323-2358
Email: mkt@ntnamerica.com
Website: www.ntnamericas.com

Item # UELFL210D1, Two Bolt Rhombus Flanged Unit, Cast Housing, Eccentric Locking Collar, UELFL Type

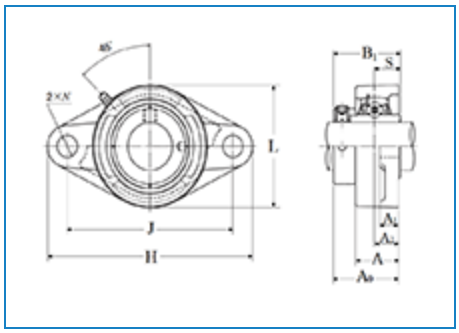

Order Now | Technical Specifications | Dimensional Specifications

Order Now

Ordering Options	FIND A DISTRIBUTOR CONTACT NTN CUSTOMER SUPPORT SPECIALIST ORDER THROUGH NTN DOL (AUTHORIZED DISTRIBUTORS ONLY)

Technical Specifications

Type	2-Bolt Rhombus Flanged Unit
Bearing Type	Ball Bearing

Locking Device	Eccentric Locking Collar
Seal Type	Contact
Seal Material	Nitrile Rubber
Bearing Number	UEL210D1
Housing Number	FL210D1
Housing Material	Cast Iron
Housing Construction	1 Piece
End Type	Open
Performance	Light Duty
Dynamic Load Rating	7850 lbf 35000 N 35.00 kN
Static Load Rating	5200 lbf 23200 N 23.20 kN
Rotational Speed [Max]	3100 RPM
Weight	5.100 lb 2.310 kg
Operating Temperature Range	-40 to 250 °F -40 to 120 °C
Lubrication	Relubricatable

Dimensional Specifications

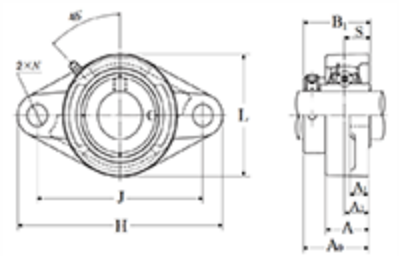

Two Bolt Rhombus Flanged Unit, Cast Housing, Eccentric Locking Collar, UELFL Type - Dimensions

d	1.9685 in 50.000 mm
H	7.7500 in 197.0 mm
L	4.5312 in 115.0 mm
J	6.1875 in 157.0 mm
A	1.5625 in 40.0 mm
A1	0.6250 in 16.0 mm
A2	0.8594 in 22.0 mm
N	0.7500 in 19.0 mm
B1	2.4685 in 62.700 mm
S	0.9685 in 24.600 mm
F	0.2323 in 5.900 mm