NTN BEARING CORPORATION OF AMERICA
Head Office
1600 E. Bishop Court, P.O. Box 7604
Mount Prospect, IL 60056-7604, U.S.A.
Phone: 847-298-7500
Fax: 847-699-9744
Toll Free: 800-323-2358
Email: mkt@ntnamerica.com
Website: www.ntnamericas.com

Item # UELFL210-113D1, Two Bolt Rhombus Flanged Unit, Cast Housing, Eccentric Locking Collar, UELFL Type

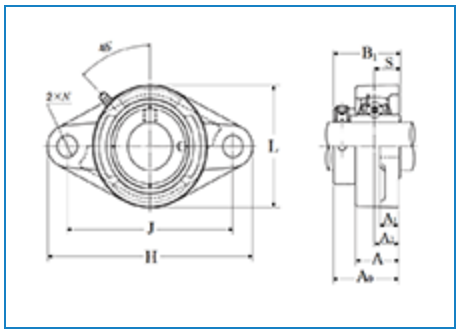

Order Now | Technical Specifications | Dimensional Specifications

Order Now

Ordering Options	FIND A DISTRIBUTOR CONTACT NTN CUSTOMER SUPPORT SPECIALIST ORDER THROUGH NTN DOL (AUTHORIZED DISTRIBUTORS ONLY)

Technical Specifications

Type	2-Bolt Rhombus Flanged Unit
Bearing Type	Ball Bearing

Locking Device	Eccentric Locking Collar
Seal Type	Contact
Seal Material	Nitrile Rubber
Bearing Number	UEL210-113D1
Housing Number	FL210D1
Housing Material	Cast Iron
Housing Construction	1 Piece
End Type	Open
Performance	Light Duty
Dynamic Load Rating	7850 lbf 35000 N 35.00 kN
Static Load Rating	5200 lbf 23200 N 23.20 kN
Rotational Speed [Max]	3100 RPM
Weight	5.100 lb 2.310 kg
Operating Temperature Range	-40 to 250 °F -40 to 120 °C
Lubrication	Relubricatable

Dimensional Specifications

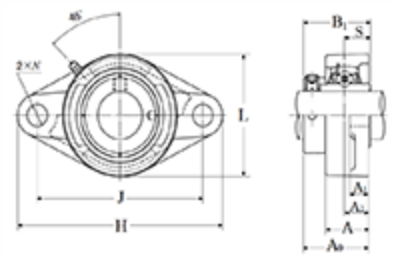

Two Bolt Rhombus Flanged Unit, Cast Housing, Eccentric Locking Collar, UELFL Type - Dimensions

d	1.8125 in 46.038 mm
H	7.7500 in 197.0 mm
L	4.5312 in 115.0 mm
J	6.1875 in 157.0 mm
A	1.5625 in 40.0 mm
A1	0.6250 in 16.0 mm
A2	0.8594 in 22.0 mm
N	0.7500 in 19.0 mm
B1	2.4685 in 62.700 mm
S	0.9685 in 24.600 mm
F	0.2323 in 5.900 mm