NTN BEARING CORPORATION OF AMERICA
Head Office
1600 E. Bishop Court, P.O. Box 7604
Mount Prospect, IL 60056-7604, U.S.A.
Phone: 847-298-7500
Fax: 847-699-9744
Toll Free: 800-323-2358
Email: mkt@ntnamerica.com
Website: www.ntnamericas.com

Item # UELFL208-109D1, Two Bolt Rhombus Flanged Unit, Cast Housing, Eccentric Locking Collar, UELFL Type

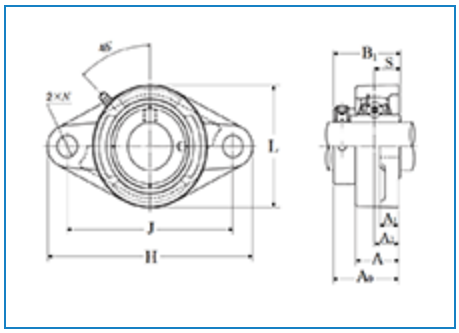

Order Now | Technical Specifications | Dimensional Specifications

Order Now

Ordering Options	FIND A DISTRIBUTOR CONTACT NTN CUSTOMER SUPPORT SPECIALIST ORDER THROUGH NTN DOL (AUTHORIZED DISTRIBUTORS ONLY)

Technical Specifications

Type	2-Bolt Rhombus Flanged Unit
Bearing Type	Ball Bearing

Locking Device	Eccentric Locking Collar
Seal Type	Contact
Seal Material	Nitrile Rubber
Bearing Number	UEL208-109D1
Housing Number	FL208D1
Housing Material	Cast Iron
Housing Construction	1 Piece
End Type	Open
Performance	Light Duty
Dynamic Load Rating	6550 lbf 29100 N 29.10 kN
Static Load Rating	4000 lbf 17800 N 17.80 kN
Rotational Speed [Max]	3700 RPM
Weight	3.700 lb 1.680 kg
Operating Temperature Range	-40 to 250 °F -40 to 120 °C
Lubrication	Relubricatable

Dimensional Specifications

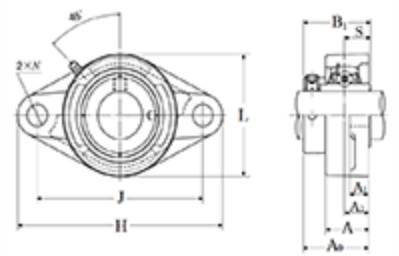

Two Bolt Rhombus Flanged Unit, Cast Housing, Eccentric Locking Collar, UELFL Type - Dimensions

d	1.5625 in 39.688 mm
H	6.8750 in 175.0 mm
L	3.9375 in 100.0 mm
J	5.6719 in 144.0 mm
A	1.4062 in 36.0 mm
A1	0.5937 in 15.0 mm
A2	0.8281 in 21.0 mm
N	0.6250 in 16.0 mm
B1	2.2165 in 56.300 mm
S	0.8425 in 21.400 mm
F	0.1772 in 4.500 mm