NTN BEARING CORPORATION OF AMERICA
Head Office
1600 E. Bishop Court, P.O. Box 7604
Mount Prospect, IL 60056-7604, U.S.A.
Phone: 847-298-7500
Fax: 847-699-9744
Toll Free: 800-323-2358
Email: mkt@ntnamerica.com
Website: www.ntnamericas.com

Item # UELFL206-101D1, Two Bolt Rhombus Flanged Unit, Cast Housing, Eccentric Locking Collar, UELFL Type

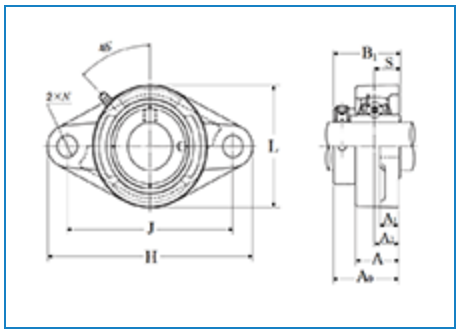

Order Now | Technical Specifications | Dimensional Specifications

Order Now

Ordering Options	FIND A DISTRIBUTOR CONTACT NTN CUSTOMER SUPPORT SPECIALIST ORDER THROUGH NTN DOL (AUTHORIZED DISTRIBUTORS ONLY)

Technical Specifications

Type	2-Bolt Rhombus Flanged Unit
Bearing Type	Ball Bearing

Locking Device	Eccentric Locking Collar
Seal Type	Contact
Seal Material	Nitrile Rubber
Bearing Number	UEL206-101D1
Housing Number	FL206D1
Housing Material	Cast Iron
Housing Construction	1 Piece
End Type	Open
Performance	Light Duty
Dynamic Load Rating	4400 lbf 19500 N 19.50 kN
Static Load Rating	2540 lbf 11300 N 11.30 kN
Rotational Speed [Max]	4900 RPM
Weight	2.200 lb 0.998 kg
Operating Temperature Range	-40 to 250 °F -40 to 120 °C
Lubrication	Relubricatable

Dimensional Specifications

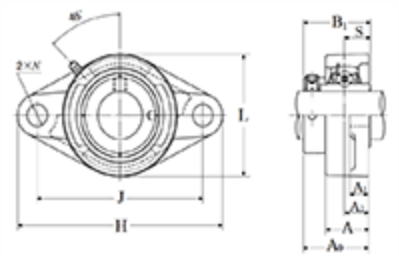

Two Bolt Rhombus Flanged Unit, Cast Housing, Eccentric Locking Collar, UELFL Type - Dimensions

d	1.0625 in 26.988 mm
H	5.8125 in 148.0 mm
L	3.1562 in 80.0 mm
J	4.6094 in 117.0 mm
A	1.2187 in 31.0 mm
A1	0.5000 in 13.0 mm
A2	0.7031 in 18.0 mm
N	0.6250 in 16.0 mm
B1	1.9055 in 48.400 mm
S	0.7205 in 18.300 mm
F	0.1811 in 4.600 mm