NTN BEARING CORPORATION OF AMERICA
Head Office
1600 E. Bishop Court, P.O. Box 7604
Mount Prospect, IL 60056-7604, U.S.A.
Phone: 847-298-7500
Fax: 847-699-9744
Toll Free: 800-323-2358
Email: mkt@ntnamerica.com
Website: www.ntnamericas.com

Item # UELFL205-014D1, Two Bolt Rhombus Flanged Unit, Cast Housing, Eccentric Locking Collar, UELFL Type

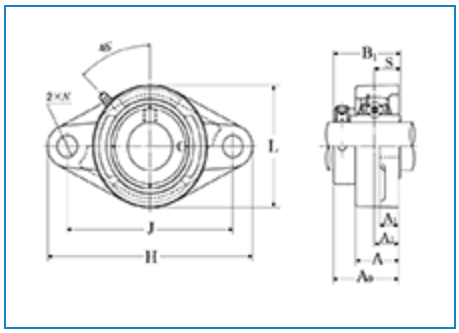

Order Now | Technical Specifications | Dimensional Specifications

Order Now

Ordering Options	FIND A DISTRIBUTOR CONTACT NTN CUSTOMER SUPPORT SPECIALIST ORDER THROUGH NTN DOL (AUTHORIZED DISTRIBUTORS ONLY)

Technical Specifications

Type	2-Bolt Rhombus Flanged Unit
Bearing Type	Ball Bearing

Locking Device	Eccentric Locking Collar
Seal Type	Contact
Seal Material	Nitrile Rubber
Bearing Number	UEL205-014D1
Housing Number	FL205D1
Housing Material	Cast Iron
Housing Construction	1 Piece
End Type	Open
Performance	Light Duty
Dynamic Load Rating	3150 lbf 14000 N 14.00 kN
Static Load Rating	1760 lbf 7850 N 7.85 kN
Rotational Speed [Max]	5900 RPM
Weight	1.500 lb 0.680 kg
Operating Temperature Range	-40 to 250 °F -40 to 120 °C
Lubrication	Relubricatable

Dimensional Specifications

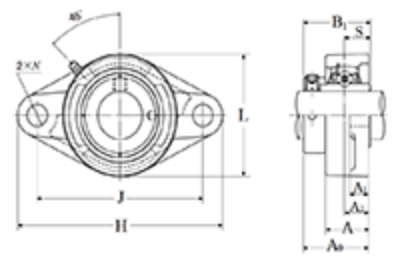

Two Bolt Rhombus Flanged Unit, Cast Housing, Eccentric Locking Collar, UELFL Type - Dimensions

d	0.8750 in 22.225 mm
H	5.1250 in 130.0 mm
L	2.6875 in 68.0 mm
J	3.8906 in 99.0 mm
A	1.0625 in 27.0 mm
A1	0.5000 in 13.0 mm
A2	0.6250 in 16.0 mm
N	0.6250 in 16.0 mm
B1	1.7480 in 44.400 mm
S	0.6890 in 17.500 mm
F	0.1772 in 4.500 mm