NTN BEARING CORPORATION OF AMERICA
Head Office
1600 E. Bishop Court, P.O. Box 7604
Mount Prospect, IL 60056-7604, U.S.A.
Phone: 847-298-7500
Fax: 847-699-9744
Toll Free: 800-323-2358
Email: mkt@ntnamerica.com
Website: www.ntnamericas.com

Item # UELFL204D1, Two Bolt Rhombus Flanged Unit, Cast Housing, Eccentric Locking Collar, UELFL Type

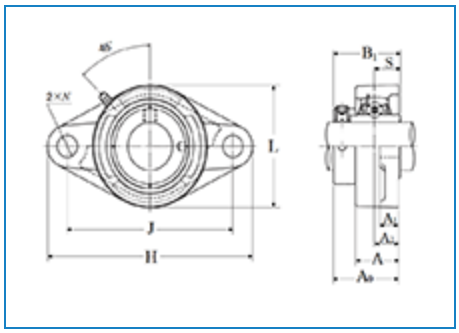

Order Now | Technical Specifications | Dimensional Specifications

Order Now

Ordering Options	FIND A DISTRIBUTOR CONTACT NTN CUSTOMER SUPPORT SPECIALIST ORDER THROUGH NTN DOL (AUTHORIZED DISTRIBUTORS ONLY)

Technical Specifications

Type	2-Bolt Rhombus Flanged Unit
Bearing Type	Ball Bearing

Locking Device	Eccentric Locking Collar
Seal Type	Contact
Seal Material	Nitrile Rubber
Bearing Number	UEL204D1
Housing Number	FL204D1
Housing Material	Cast Iron
Housing Construction	1 Piece
End Type	Open
Performance	Light Duty
Dynamic Load Rating	2880 lbf 12800 N 12.80 kN
Static Load Rating	1500 lbf 6650 N 6.65 kN
Rotational Speed [Max]	6700 RPM
Weight	1.300 lb 0.590 kg
Operating Temperature Range	-40 to 250 °F -40 to 120 °C
Lubrication	Relubricatable

Dimensional Specifications

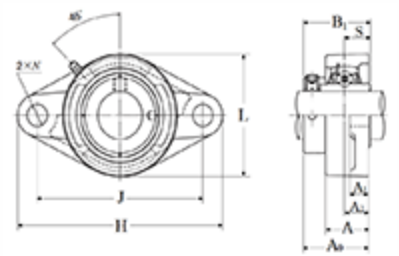

Two Bolt Rhombus Flanged Unit, Cast Housing, Eccentric Locking Collar, UELFL Type - Dimensions

d	0.7874 in 20.000 mm
H	4.4375 in 113.0 mm
L	2.3750 in 60.0 mm
J	3.5469 in 90.0 mm
A	1.0000 in 25.5 mm
A1	0.4375 in 11.0 mm
A2	0.5937 in 15.0 mm
N	0.4687 in 12.0 mm
B1	1.7205 in 43.700 mm
S	0.6732 in 17.100 mm
F	0.1850 in 4.700 mm