NTN BEARING CORPORATION OF AMERICA
Head Office
1600 E. Bishop Court, P.O. Box 7604
Mount Prospect, IL 60056-7604, U.S.A.
Phone: 847-298-7500
Fax: 847-699-9744
Toll Free: 800-323-2358
Email: mkt@ntnamerica.com
Website: www.ntnamericas.com

Item # UEL215D1, Bearing Insert w/ Eccentric Locking Collar, Wide Inner Ring - Spherical O.D.

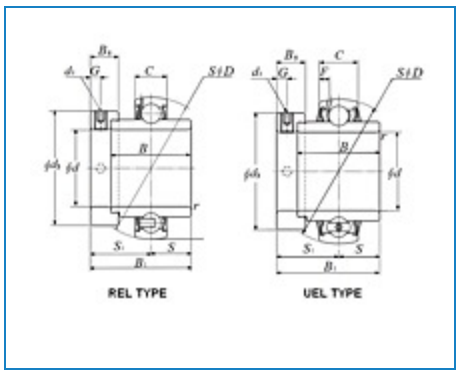

Order Now | Technical Specifications | Dimensional Specifications

Order Now

Ordering Options	FIND A DISTRIBUTOR CONTACT NTN CUSTOMER SUPPORT SPECIALIST ORDER THROUGH NTN DOL (AUTHORIZED DISTRIBUTORS ONLY)

Technical Specifications

Type	Insert Bearing

Bore Type	Round
Bearing Type	Ball Bearing
Material	Through Hardened Steel
Ball Material	Steel
Limiting Speed - Grease	2100 RPM
Seal Type	Contact
Seal Material	Nitrile Rubber
Performance	Standard Duty
Configuration	One
Locking Device	Eccentric Locking Collar
Lubrication	Relubricatable
Collar Number	EL215
Basic Outer Ring	215
Static Load Rating	11100 lbf 49500 N 49.50 kN
Dynamic Load Rating	14800 lbf 66000 N 66.00 kN
Enclosure	Double Sealed
Weight	5.908 lb 2.680 kg
Operating Temperature Range	-40 to 250 °F -40 to 120 °C

Dimensional Specifications

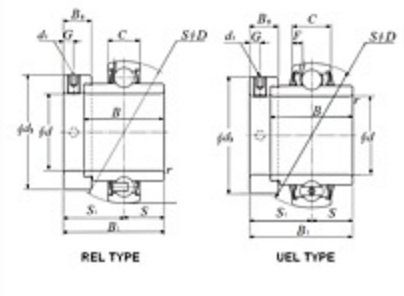

Bearing Insert w/ Eccentric Locking Collar, Wide Inner Ring - Spherical O.D. - Dimensions

d	2-19/20 in 75.000 mm
D	5.1181 in 130.000 mm
C	1.3386 in 34.000 mm
B	2.9370 in 74.600 mm
B1	3.6220 in 92.000 mm
r	0.0591 in 1.500 mm
ds	M10x1.25
G	0.3425 in 8.700 mm
d3	4.0157 in 102.000 mm
B5	0.9370 in 23.800 mm
S1	2.1535 in 54.700 mm
S	0.6575 in 16.700 mm
F	0.3543 in 9.000 mm