NTN BEARING CORPORATION OF AMERICA
Head Office
1600 E. Bishop Court, P.O. Box 7604
Mount Prospect, IL 60056-7604, U.S.A.
Phone: 847-298-7500
Fax: 847-699-9744
Toll Free: 800-323-2358
Email: mkt@ntnamerica.com
Website: www.ntnamericas.com

Item # UEL213-209D1, Bearing Insert w/ Eccentric Locking Collar, Wide Inner Ring - Spherical O.D.

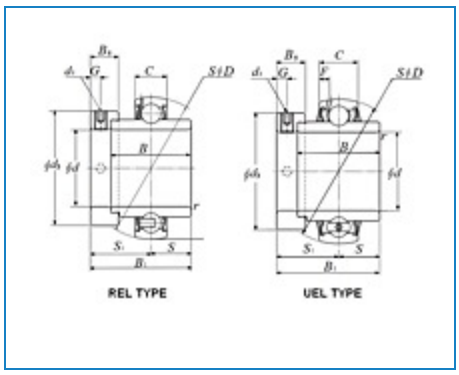

Order Now | Technical Specifications | Dimensional Specifications

Order Now

Ordering Options	FIND A DISTRIBUTOR CONTACT NTN CUSTOMER SUPPORT SPECIALIST ORDER THROUGH NTN DOL (AUTHORIZED DISTRIBUTORS ONLY)

Technical Specifications

Type	Insert Bearing

Bore Type	Round
Bearing Type	Ball Bearing
Material	Through Hardened Steel
Ball Material	Steel
Limiting Speed - Grease	2400 RPM
Seal Type	Contact
Seal Material	Nitrile Rubber
Performance	Standard Duty
Configuration	One
Locking Device	Eccentric Locking Collar
Locking Device Part Number	EL213-209
Lubrication	Relubricatable
Basic Outer Ring	213
Static Load Rating	9000 lbf 40000 N 40.00 kN
Dynamic Load Rating	12900 lbf 57500 N 57.50 kN
Enclosure	Double Sealed
Weight	5.300 lb 2.404 kg
Operating Temperature Range	-40 to 250 °F -40 to 120 °C

Dimensional Specifications

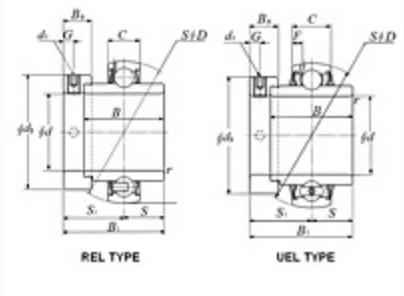

Bearing Insert w/ Eccentric Locking Collar, Wide Inner Ring - Spherical O.D. - Dimensions

d	2-9/16 in 65.088 mm
D	4.7244 in 120.000 mm
C	1.2598 in 32.000 mm
B	2.6890 in 68.300 mm
B1	3.3740 in 85.700 mm
r	0.0787 in 2.000 mm
ds	3/8-24 UNF
G	0.3425 in 8.700 mm
d3	3.8189 in 97.000 mm
B5	0.9370 in 23.800 mm
S1	2.0295 in 51.550 mm
S	1.3445 in 34.150 mm
F	0.3425 in 8.700 mm