NTN BEARING CORPORATION OF AMERICA
Head Office
1600 E. Bishop Court, P.O. Box 7604
Mount Prospect, IL 60056-7604, U.S.A.
Phone: 847-298-7500
Fax: 847-699-9744
Toll Free: 800-323-2358
Email: mkt@ntnamerica.com
Website: www.ntnamericas.com

Item # UEL212-205D1, Bearing Insert w/ Eccentric Locking Collar, Wide Inner Ring - Spherical O.D.

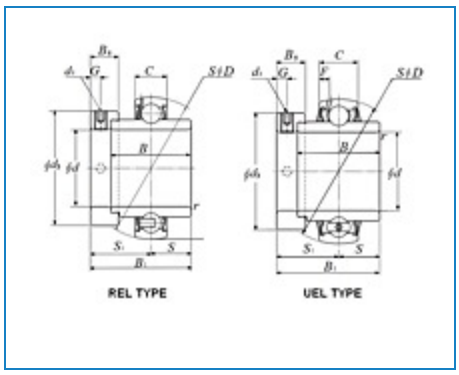

Order Now | Technical Specifications | Dimensional Specifications

Order Now

Ordering Options	FIND A DISTRIBUTOR CONTACT NTN CUSTOMER SUPPORT SPECIALIST ORDER THROUGH NTN DOL (AUTHORIZED DISTRIBUTORS ONLY)

Technical Specifications

Type	Insert Bearing

Bore Type	Round
Bearing Type	Ball Bearing
Material	Through Hardened Steel
Ball Material	Steel
Limiting Speed - Grease	2500 RPM
Seal Type	Contact
Seal Material	Nitrile Rubber
Performance	Standard Duty
Configuration	One
Locking Device	Eccentric Locking Collar
Locking Device Part Number	EL212-205
Lubrication	Relubricatable
Basic Outer Ring	212
Static Load Rating	8100 lbf 36000 N 36.00 kN
Dynamic Load Rating	11800 lbf 52500 N 52.50 kN
Enclosure	Double Sealed
Weight	4.220 lb 1.914 kg
Operating Temperature Range	-40 to 250 °F -40 to 120 °C

Dimensional Specifications

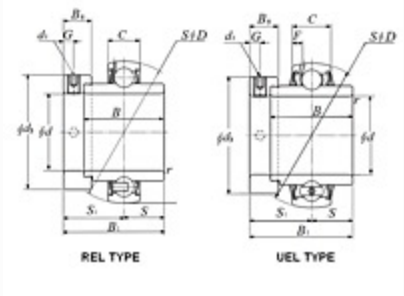

Bearing Insert w/ Eccentric Locking Collar, Wide Inner Ring - Spherical O.D. - Dimensions

d	2-5/16 in 58.738 mm
D	4.3307 in 110.000 mm
C	1.0630 in 27.000 mm
B	2.4370 in 61.900 mm
B1	3.0630 in 77.800 mm
r	0.0787 in 2.000 mm
ds	3/8-24 UNF
G	0.3150 in 8.000 mm
d3	3.3071 in 84.000 mm
B5	0.8780 in 22.300 mm
S1	1.8425 in 46.800 mm
S	1.2205 in 31.000 mm
F	0.2441 in 6.200 mm