NTN BEARING CORPORATION OF AMERICA
Head Office
1600 E. Bishop Court, P.O. Box 7604
Mount Prospect, IL 60056-7604, U.S.A.
Phone: 847-298-7500
Fax: 847-699-9744
Toll Free: 800-323-2358
Email: mkt@ntnamerica.com
Website: www.ntnamericas.com

Item # UEL211-201D1, Bearing Insert w/ Eccentric Locking Collar, Wide Inner Ring - Spherical O.D.

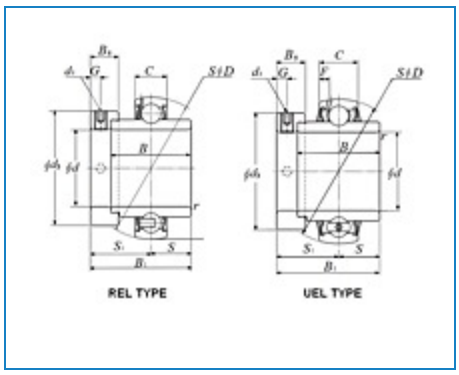

Order Now | Technical Specifications | Dimensional Specifications

Order Now

Ordering Options	FIND A DISTRIBUTOR CONTACT NTN CUSTOMER SUPPORT SPECIALIST ORDER THROUGH NTN DOL (AUTHORIZED DISTRIBUTORS ONLY)

Technical Specifications

Type	Insert Bearing

Bore Type	Round
Bearing Type	Ball Bearing
Material	Through Hardened Steel
Ball Material	Steel
Limiting Speed - Grease	2900 RPM
Seal Type	Contact
Seal Material	Nitrile Rubber
Performance	Standard Duty
Configuration	One
Locking Device	Eccentric Locking Collar
Locking Device Part Number	EL211-201
Lubrication	Relubricatable
Basic Outer Ring	211
Static Load Rating	6550 lbf 29200 N 29.20 kN
Dynamic Load Rating	9800 lbf 43500 N 43.50 kN
Enclosure	Double Sealed
Weight	3.120 lb 1.415 kg
Operating Temperature Range	-40 to 250 °F -40 to 120 °C

Dimensional Specifications

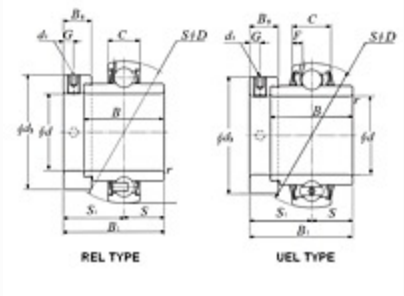

Bearing Insert w/ Eccentric Locking Collar, Wide Inner Ring - Spherical O.D. - Dimensions

d	2-1/16 in 52.388 mm
D	3.9370 in 100.000 mm
C	0.9843 in 25.000 mm
B	2.1850 in 55.500 mm
B1	2.8110 in 71.400 mm
r	0.0787 in 2.000 mm
ds	3/8-24 UNF
G	0.3150 in 8.000 mm
d3	2.9921 in 76.000 mm
B5	0.8150 in 20.700 mm
S1	1.7165 in 43.600 mm
S	1.0945 in 27.800 mm
F	0.2362 in 6.000 mm