NTN BEARING CORPORATION OF AMERICA
Head Office
1600 E. Bishop Court, P.O. Box 7604
Mount Prospect, IL 60056-7604, U.S.A.
Phone: 847-298-7500
Fax: 847-699-9744
Toll Free: 800-323-2358
Email: mkt@ntnamerica.com
Website: www.ntnamericas.com

Item # UEL210-114D1, Bearing Insert w/ Eccentric Locking Collar, Wide Inner Ring - Spherical O.D.

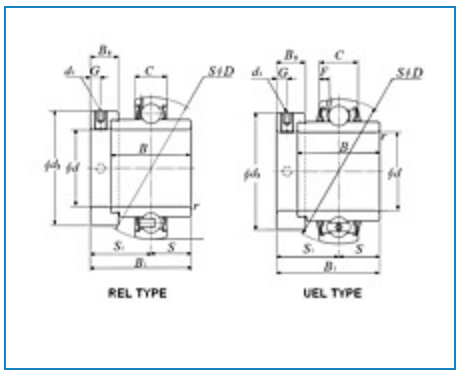

Order Now | Technical Specifications | Dimensional Specifications

Order Now

Ordering Options	FIND A DISTRIBUTOR CONTACT NTN CUSTOMER SUPPORT SPECIALIST ORDER THROUGH NTN DOL (AUTHORIZED DISTRIBUTORS ONLY)

Technical Specifications

Type	Insert Bearing

Bore Type	Round
Bearing Type	Ball Bearing
Material	Through Hardened Steel
Ball Material	Steel
Limiting Speed - Grease	3100 RPM
Seal Type	Contact
Seal Material	Nitrile Rubber
Performance	Standard Duty
Configuration	One
Locking Device	Eccentric Locking Collar
Locking Device Part Number	EL210-114
Lubrication	Relubricatable
Collar Number	C-114#BCA
Basic Outer Ring	210
Radial Internal Clearance	CN
Static Load Rating	5216 lbf 23200 N 23.20 kN
Dynamic Load Rating	7868 lbf 35000 N 35.00 kN
Enclosure	Double Sealed
Weight	2.503 lb 1.140 kg
Operating Temperature Range	-40 to 250 °F -40 to 120 °C

Dimensional Specifications

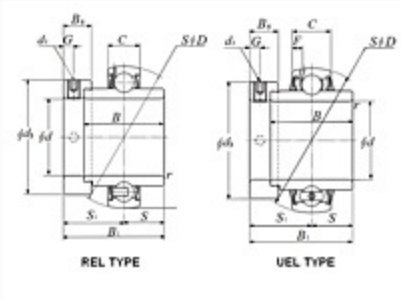

Bearing Insert w/ Eccentric Locking Collar, Wide Inner Ring - Spherical O.D. - Dimensions

d	1-7/8 in 47.625 mm
D	3.5433 in 90.000 mm
C	0.9449 in 24.000 mm
B	1.9370 in 49.200 mm
B1	2.4685 in 62.700 mm
r	0.0591 in 1.500 mm
ds	3/8-24 UNF
G	0.2677 in 6.800 mm
d3	2.7362 in 69.500 mm
B5	0.7205 in 18.300 mm
S1	1.5000 in 38.100 mm
S	0.9685 in 24.600 mm
F	0.2323 in 5.900 mm