NTN BEARING CORPORATION OF AMERICA
Head Office
1600 E. Bishop Court, P.O. Box 7604
Mount Prospect, IL 60056-7604, U.S.A.
Phone: 847-298-7500
Fax: 847-699-9744
Toll Free: 800-323-2358
Email: mkt@ntnamerica.com
Website: www.ntnamericas.com

Item # UEL208-108D1, Bearing Insert w/ Eccentric Locking Collar, Wide Inner Ring - Spherical O.D.

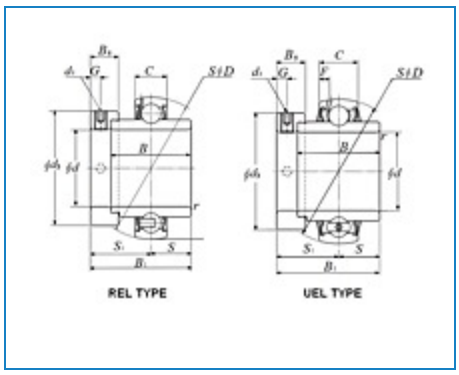

Order Now | Technical Specifications | Dimensional Specifications

Order Now

Ordering Options	FIND A DISTRIBUTOR CONTACT NTN CUSTOMER SUPPORT SPECIALIST ORDER THROUGH NTN DOL (AUTHORIZED DISTRIBUTORS ONLY)

Technical Specifications

Type	Insert Bearing

Bore Type	Round
Bearing Type	Ball Bearing
Material	Through Hardened Steel
Ball Material	Steel
Limiting Speed - Grease	3700 RPM
Seal Type	Contact
Seal Material	Nitrile Rubber
Performance	Standard Duty
Configuration	One
Locking Device	Eccentric Locking Collar
Locking Device Part Number	EL208-108
Lubrication	Relubricatable
Collar Number	C-108#BCA
Basic Outer Ring	208
Radial Internal Clearance	CN
Static Load Rating	4002 lbf 17800 N 17.80 kN
Dynamic Load Rating	6542 lbf 29100 N 29.10 kN
Enclosure	Double Sealed
Weight	1.896 lb 0.860 kg
Operating Temperature Range	-40 to 250 °F -40 to 120 °C

Dimensional Specifications

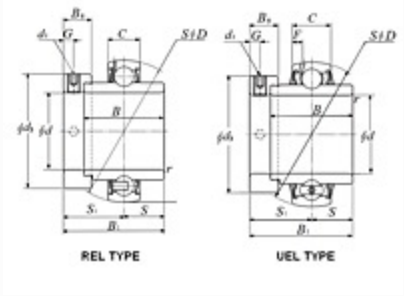

Bearing Insert w/ Eccentric Locking Collar, Wide Inner Ring - Spherical O.D. - Dimensions

d	1-1/2 in 38.100 mm
D	3.1496 in 80.000 mm
C	0.8268 in 21.000 mm
B	1.6850 in 42.800 mm
B1	2.2165 in 56.300 mm
r	0.0591 in 1.500 mm
ds	3/8-24 UNF
G	0.2677 in 6.800 mm
d3	2.3622 in 60.000 mm
B5	0.7205 in 18.300 mm
S1	1.3740 in 34.900 mm
S	0.8425 in 21.400 mm
F	0.1772 in 4.500 mm