NTN BEARING CORPORATION OF AMERICA
Head Office
1600 E. Bishop Court, P.O. Box 7604
Mount Prospect, IL 60056-7604, U.S.A.
Phone: 847-298-7500
Fax: 847-699-9744
Toll Free: 800-323-2358
Email: mkt@ntnamerica.com
Website: www.ntnamericas.com

Item # UEL207-106D1, Bearing Insert w/ Eccentric Locking Collar, Wide Inner Ring - Spherical O.D.

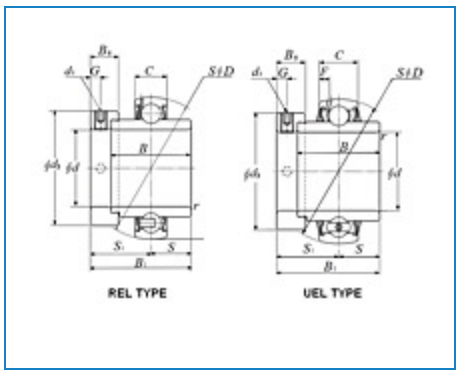

Order Now | Technical Specifications | Dimensional Specifications

Order Now

Ordering Options	FIND A DISTRIBUTOR CONTACT NTN CUSTOMER SUPPORT SPECIALIST ORDER THROUGH NTN DOL (AUTHORIZED DISTRIBUTORS ONLY)

Technical Specifications

Type	Insert Bearing

Bore Type	Round
Bearing Type	Ball Bearing
Material	Through Hardened Steel
Ball Material	Steel
Limiting Speed - Grease	4200 RPM
Seal Type	Contact
Seal Material	Nitrile Rubber
Performance	Standard Duty
Configuration	One
Locking Device	Eccentric Locking Collar
Locking Device Part Number	EL207-106
Lubrication	Relubricatable
Collar Number	C-106#BCA
Basic Outer Ring	207
Radial Internal Clearance	CN
Static Load Rating	3440 lbf 15300 N 15.30 kN
Dynamic Load Rating	5778 lbf 25700 N 25.70 kN
Enclosure	Double Sealed
Weight	1.444 lb 0.650 kg
Operating Temperature Range	-40 to 250 °F -40 to 120 °C

Dimensional Specifications

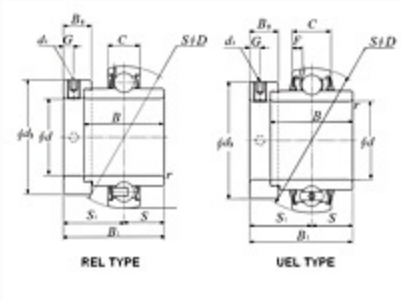

Bearing Insert w/ Eccentric Locking Collar, Wide Inner Ring - Spherical O.D. - Dimensions

d	1-3/8 in 34.925 mm
D	2.8346 in 72.000 mm
C	0.7874 in 20.000 mm
B	1.4803 in 37.600 mm
B1	2.0118 in 51.100 mm
r	0.0591 in 1.500 mm
ds	3/8-24 UNF
G	0.2677 in 6.800 mm
d3	2.1850 in 55.500 mm
B5	0.6890 in 17.500 mm
S1	1.2717 in 32.300 mm
S	0.7402 in 18.800 mm
F	0.1811 in 4.600 mm